DESCRIPTION:	SPECIFICATIONS NEON BULB	CODE **75465A - 75466A - E2310A - 90705**

VISUAL CHECKUP

ASPECT:
SHOULD NOT BE IN ARTICLE: (MAJOR)
-STAINS IN ITS PARTS
-CRACKS
-LACK OF COMPONENTS (CRITICAL)
*BULB (1)
*RESISTOR (1)
*WIRES (2)

VERIFY:
-Assembly components must be firmly attached
-The endcap of the wire is tippedoff

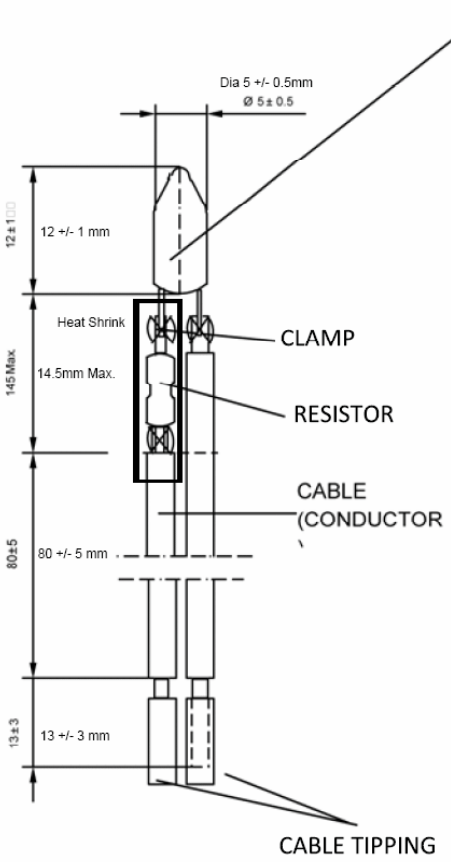

CA-M0001-0073 CA-M0001-0098

PARTICULAR CODE	75465A	75466A	E2310A
TENSION	127 V~	220 V~	127 V~
DURABILITY	20 000 hr		20 000 hr
POWER CONSUMPTION	1,13 ± 0,1 mA	1,13 ± 0,1 mA	1,13 ± 0,1 mA
RESISTOR	68 K⊲	150 K⊲	68 K⊲
WIRE GAUGE	22 AWG 0,5 mm²		22 AWG 0,5 mm²
EXTERNAL DIAMETER	1,55 mm Min.		1,55 mm Min.
COLOR COATING	BLACK	RED	GREEN

CA-M0001-0104

PARTICULAR CODE	90705
TENSION	220 V~
DURABILITY	
POWER CONSUMPTION	1,13 ± 0,1 mA
RESISTOR	150 K⊲
WIRE GAUGE	
EXTERNAL DIAMETER	
COLOR COATING	RED

REMARK: The light emitted by the Bulbs with code75465A and 75466A is red colored. For the Bulbs with code E2310A and 90705 the light color is Green.

FECHA							
ELABORO							
REVISO							
APROBO		Revisión	Fecha	Descripción	Elaboro	Reviso	Vo.Bo