Ho Chien

www.hochien.com

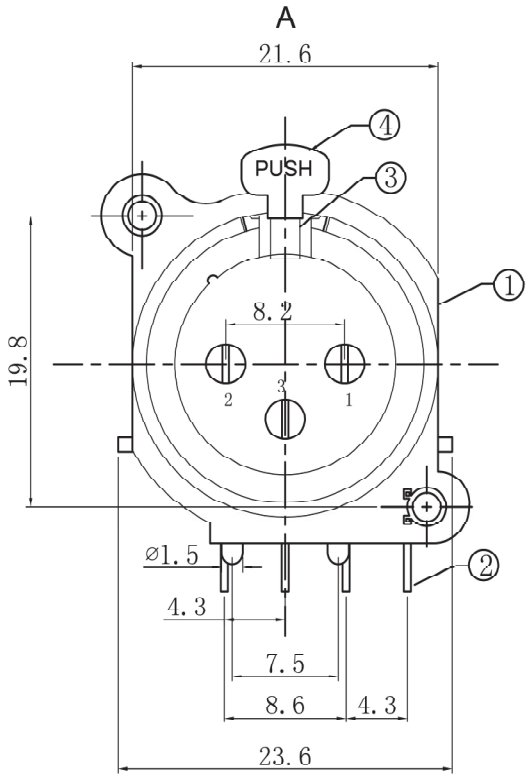

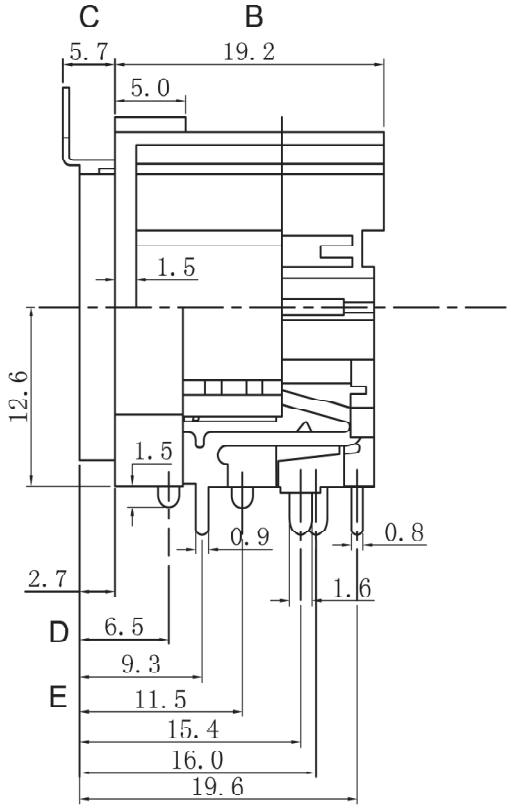

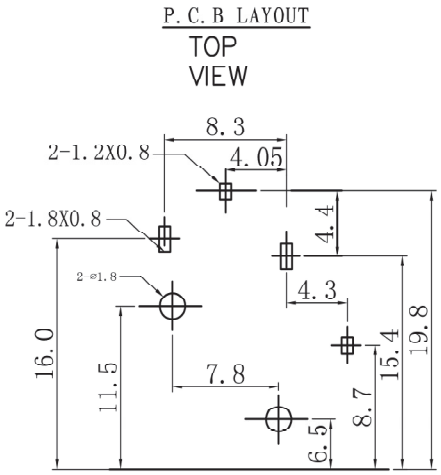

NO.	DESCRIPTION	QTY	MATERIAL	PLATING
4	KEY	1	BRASS	Ni-Plating
3	SPRING	1	STEEL	Ni-Plating
2	CONTACT FOOT	4	BRONZE	Au-Plating
1	HOUSING	1	PBT	

UNIT: MM	TYPE:	MODEL NO:	PAPER NO. A4		PAGE 1 OF 1	
	DIN SOCKET	LX-1604H-3-P	TOLERANCE	ANGLES	SCALE	VER
			±0.15	±1.5°	2.1	1

DESIGNER BY:	
CHECK BY:	
DATE :	

XLR LX-1604H-3 CONNECTOR
FEMALE R/A W/ PUSH TAB