HO CHIEN P/N.
1A11-10, 1A21-10, 1A41-10

REVISION	DESCRECPTION	DATE
0	SET UP	AUG/19/2005

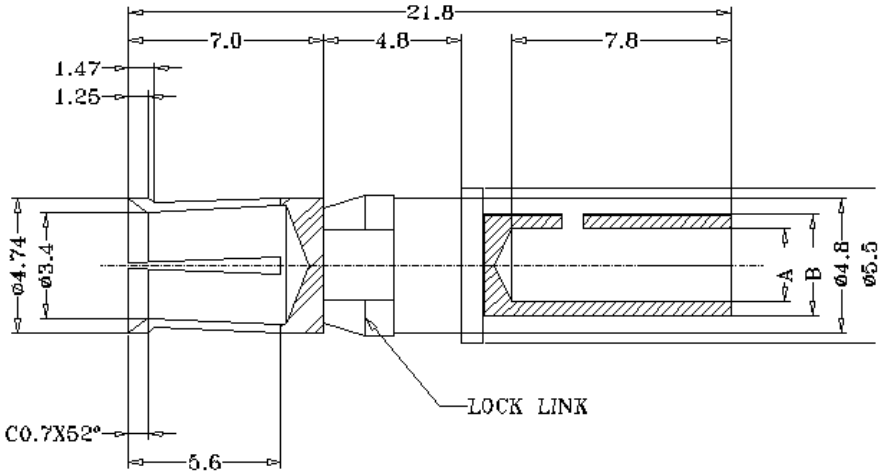

PN#	Current Rating	Wire Size	Dimension		
			øA	øB	C
1A41-10	40 Amps	AWG #8	ø4.6	ø5.5	5.5
1A21-10	20 Amps	AWG #12	ø2.7	ø3.6	5.0
1A11-10	10 Amps	AWG #16	ø1.7	ø2.5	4.5

NO.	DERSCRIPTION	MATERIAL	FINISH OR OTHER
1	Body	Brass	Gold flash or Gold plated over 1.27um (50u") Nickel
2	LOCK LINK	Brass	Nickel plated

HO CHIEN ENTERPRISE

TITLE: Power Crimp Type Female Contact

DR:	CHK:	APPD:	PAGE:	HO CHIEN P/N.
RON CHEN	J.T.CHEN	C.Y.LIN	1 OF 1	1A11-10, 1A21-10, 1A41-10